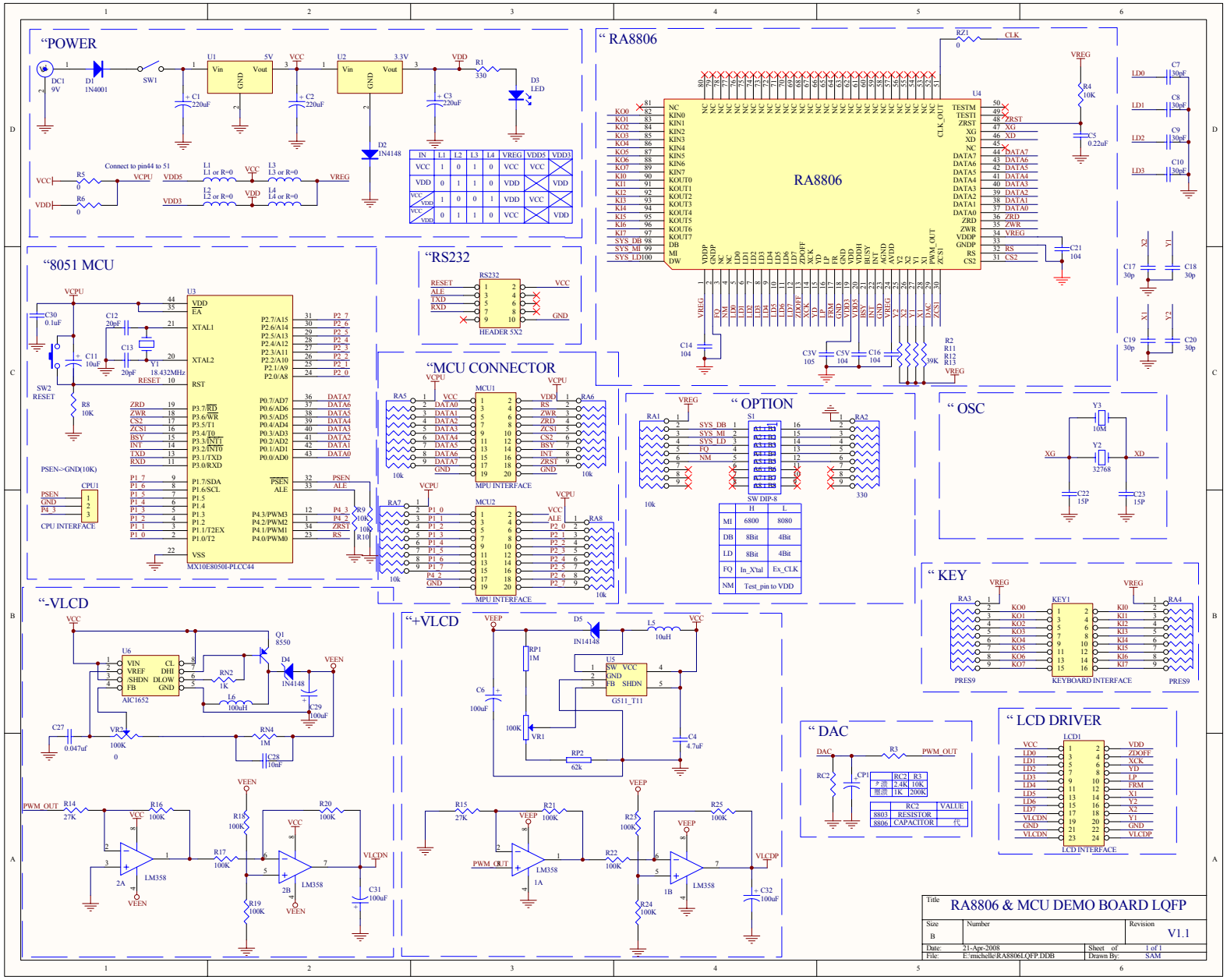
"POWER
DC1 9V
D1 1N4001
SW1
U1 5V
U2 3.3V
Vin Vout GND
C1 220uF
C2 220uF
C3 220uF
R1 330
D3 LED
D2 1N4148
Connect to pin44 to 51
R5 0
R6 0
L1 L1 or R=0
L2 L2 or R=0
L3 L3 or R=0
L4 L4 or R=0
VCPU VDD5 VDD3 VREG VCC VDD
IN L1 L2 L3 L4 VREG VDD5 VDD3
VCC 1 0 1 0 VCC VCC
VDD 0 1 1 0 VDD VDD
VCC/VDD 1 0 0 1 VDD VCC
VCC/VDD 0 1 1 0 VCC VDD
"RA8806
RA8806
U4
RZ1 0
CLK
R4 10K
C5 0.22uF
C21 104
C14 104
C3V 105
C5V 104
C16 104
R2 R11 R12 R13 39K
C7 30pF
C8 30pF
C9 30pF
C10 30pF
LD0 LD1 LD2 LD3
C17 30p
C18 30p
C19 30p
C20 30p
X1 X2 Y1 Y2
"8051 MCU
U3
MX10E8050I-PLCC44
VDD EA XTAL1 XTAL2 RST
P2.7/A15 P2.6/A14 P2.5/A13 P2.4/A12 P2.3/A11 P2.2/A10 P2.1/A9 P2.0/A8
P0.7/AD7 P0.6/AD6 P0.5/AD5 P0.4/AD4 P0.3/AD3 P0.2/AD2 P0.1/AD1 P0.0/AD0
P3.7/RD P3.6/WR P3.5/T1 P3.4/T0 P3.3/INT1 P3.2/INT0 P3.1/TXD P3.0/RXD
P1.7/SDA P1.6/SCL P1.5 P1.4 P1.3 P1.2 P1.1/T2EX P1.0/T2
P4.3/PWM3 P4.2/PWM2 P4.1/PWM1 P4.0/PWM0
PSEN ALE VSS
C30 0.1uF
C11 10uF
C12 20pF
C13 20pF
Y1 18.432MHz
SW2 RESET
R8 10K
PSEN->GND(10K)
CPU1
CPU INTERFACE
R9 10K
R10 10K
"RS232
RS232
HEADER 5X2
"MCU CONNECTOR
MCU1
MPU INTERFACE
MCU2
MPU INTERFACE
RA5 RA6 RA7 RA8
10k
"OPTION
S1
SW DIP-8
RA1 RA2
330
H L
MI 6800 8080
DB 8Bit 4Bit
LD 8Bit 4Bit
FQ In_Xtal Ex_CLK
NM Test_pin to VDD
"OSC
Y3 10M
Y2 32768
XG XD
C22 15P
C23 15P
"KEY
RA3 RA4
KEY1
KEYBOARD INTERFACE
PRES9
"-VLCD
U6
AIC1652
VIN VREF /SHDN FB CL DHI DLOW GND
Q1 8550
D4 1N4148
RN2 1K
L6 100uH
C29 100uF
C27 0.047uf
VR3 100K
RN4 1M
C28 10nF
PWM_OUT R14 27K
R16 100K
R17 100K
R18 100K
R19 100K
R20 100K
LM358
VLCDN
C31 100uF
"+VLCD
D5 1N4148
L5 10uH
U5
G511_T11
RP1 1M
C6 100uF
VR1 100K
RP2 62k
C4 4.7uF
R15 27K
R21 100K
R22 100K
R23 100K
R24 100K
R25 100K
VLCDP
C32 100uF
"DAC
DAC
R3 PWM_OUT
RC2
CP1
RC2 R3
2.4K 10K
1K 200K
RC2 VALUE
8803 RESISTOR
8806 CAPACITOR
"LCD DRIVER
LCD1
LCD INTERFACE
VCC LD0 LD1 LD2 LD3 LD4 LD5 LD6 LD7 VLCDN GND VLCDN
VDD ZDOFF XCK YD LP FRM X1 Y2 X2 Y1 GND VLCDP
Title
RA8806 & MCU DEMO BOARD LQFP
Size B
Number
Revision V1.1
Date: 21-Apr-2008
File: E:\michelle\RA8806LQFP.DDB
Sheet of 1 of 1
Drawn By: SAM